DH-S3010-8ET2ET-60

10-Port Unmanaged Desktop Switch with 8-Port PoE

- Easy to install, and is plug and play.
- Meets the requirements of IEEE802.3af and IEEE802.3at standards.
- Performs long-distance transmission.
- With its solid full metal design, the device has great heat dissipation and no fan.
- Wide operating temperature ranging from –10 °C to +55 °C.
- Supports wall mount and desktop mount.

Series Overview

Highly reliable, the unmanaged PoE switch is equipped with a high performance switching engine, has large buffer memory and optimizes transmission performance. The device supports long distance PoE, and the PoE port provides up to 30 W, making it suitable for small and medium sized settings that require PoE power supplies. It can operate in temperatures ranging -10°C to 55°C. It also features EMC and has protection against overvoltage, overcurrent, static electricity, lightning strikes, pulses and other types of interference.

Functions

Plug and Play

Hassle-free, it does not require any configuration. Simply use after it is powered on.

Easy Installation

Both desktop and wall mount installation are supported, making it suitable for a wide variety of scenarios.

Long Distance PoE

The transmission distance of a PoE port can be up to 250 m, meeting the requirement of wired transmission (bandwidth reduced to 10 Mbps).

Wide Operating Temperature

Supports working at ambient temperatures of –10 °C to +55 °C, and has built-in professional lightning-proof circuits that effectively reduce the impact of thunderstorms on network systems and improve system robustness, allowing the device to adapt to harsh environments.

Scene

Suitable for scenes such as houses, factories and offices.

Technical Specification

Basic

Layer	Unmanaged
Switching Capacity	2 Gbps
Packet Forwarding Rate	1.488 Mpps
Description of Function Slots	Port 1-8: 8 × RJ45 10/100 Mbps (PoE) Port 9-10: 2 × RJ45 10/100 Mbps (Uplink)
Operating Temperature	–10 °C to +55 °C (+14 °F to +131 °F)
Operating Humidity	10%–90% (RH), non-condensing
Storage Temperature	–40 °C to +75 °C (–40 °F to +167 °F)
Storage Humidity	5%–95% (RH), non-condensing
Power Supply	External power supply: 53 V, 50/60 Hz, max 1.22 A
Power Consumption	Idling: 1.9 W Full load: 63.6 W
Statics Protection	Air discharge: 8 kV Contact discharge: 6 kV
Lightning Protection	Common mode: 6 kV Differential mode: 1 kV
Net Weight	0.28 kg (0.62 lb)
Gross Weight	0.861 kg (1.90 lb)
Product Dimensions	184.6 mm × 77.4 mm × 27 mm (7.27" × 3.32" × 1.06") (L × W × H)
Packaging Dimensions	253 mm × 112 mm × 83 mm (9.96" × 4.41" × 3.27") (L × W × H)
Casing Material	Sheet Metal
Installation	Desktop mount; wall mount
Certifications	CE

PoE

PoE	Yes
PoE Power	Port 1-8≤30 W, total≤60 W
PoE Protocol	IEEE 802.3af; IEEE 802.3at
PoE Pin Assignment	1,2,4,5 (V+),3,6,7,8 (V-)
Long Distance PoE Transmission	Yes

Hardware

DIP Switch	Long Distance PoE: The transmission distance of ports 1–8 can reach up to 250 meters. The negotiation speed can be reduced to 10 Mbps.

Performance

Packet Buffer Size	768 Kbit
Jumbo Frame	2048 Byte
MAC Table Size	2K
Communication Standard	IEEE802.3; IEEE802.3u; IEEE802.3x

General

Packing List	1 × User Manual 1 × Legal and Regulatory Information 1 × Power Cord 1 × Power Adapter

Transmission Performance

Switch power supply voltage 54V.
CAT6. Max. DC resistance < 8 Ω/100 m

Cable(m)	Load Capacity(W)	Bandwidth(Mbps)
IEEE802.3bt 90W		
100	71.3	100
150	62	10
200	51	10
250	40	10
Hi-PoE 60W		
100	46	100
150	42	10
200	37	10
250	32	10
IEEE802.3at 30W		
100	25.5	100
150	25.5	10
200	25.5	10
250	24	10

Note: Data from this table was collected by Dahua test lab and is for reference only. The actual transmission distance may vary due to power consumption of connected devices or the cable type and status.

Ordering Information

Type	Model	Description
PoE Switch	DH-S3010-8ET2ET-60	10-Port Unmanaged Desktop Switch with 8-Port PoE

Installation

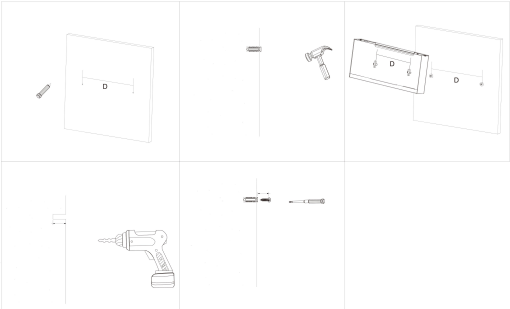

Dimensions (mm[inch])

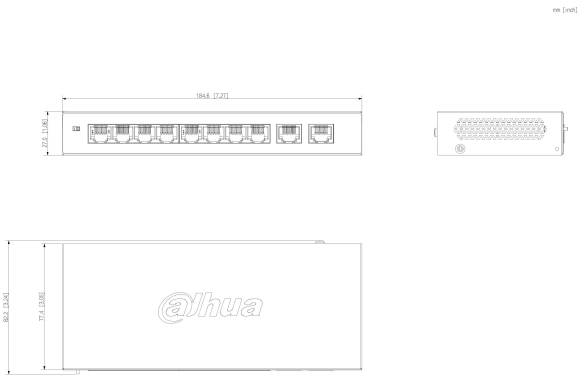

Panels

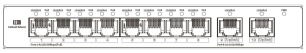

© 2025 Dahua. All rights reserved. Design and specificatons are subject to change without notce.
Pictures in the document are for reference only, and the actual product shall prevail.